Stark Effect

Motivation

Search for permanent electric dipole moments of atoms (Fr)
Parity nonconservation (Cs forbiden transition)

→ **Tests of Standard Model**

↓

Stark Effect
Interaction between electric field and atoms

↓

Spectroscopic data of polarizability
Particularly for alkali atoms

needed

Motivation

Alkali atoms: simple atomic structure
Precise theoretical calculation possible

↓

Systematic study

Relativistic effect
Core contribution

↓

Precise polarizability data : needed
For tests of calculation

Motivation

Stark effect: strong electric field

↓

Difficult to produce strong field

↓

Less study for Stark effect
Even for alkali atoms

↓

Toho university:

Systematic study of Stark effect for alkali atoms

Li, K, Rb, Cs

By high-resolution spectroscopy

Theory

Stark Effect

$$H = -\vec{p}\cdot\vec{E} \qquad \vec{p} = -e\sum_j \vec{r}_j$$

P: electric dipole moment
E: electric field

Energy Shift

$$\Delta W = \sum_j \frac{\left|\langle \phi_i | H | \phi_j \rangle\right|^2}{E_i - E_j}$$

←2nd-order perturbation

Wave function

$$\Delta W \propto E^2$$

$$\Delta W = -\frac{1}{2}\left(\alpha_s + \gamma\alpha_t\right)E^2$$

α_s : scalar polarizability
α_t : tensor polarizability

$$\gamma(J, F, m)$$

Theory

Stark shift < HFS

$$\gamma(J,F,m)=\frac{\left[3m_F{}^2-F(F+1)\right]\left[3X(X-1)-4F(F+1)J(J+1)\right]}{(2F+3)(2F+2)F(2F-1)J(2J-1)}$$

$$X=F(F+1)+J(J+1)-I(I+1)$$

J: electronic angular moment
F: total angular moment of atom
I: nuclear spin
m_F: magnetic quantum number

J=1/2 → $\alpha_t=0$

J≧1 → α_t, α_s

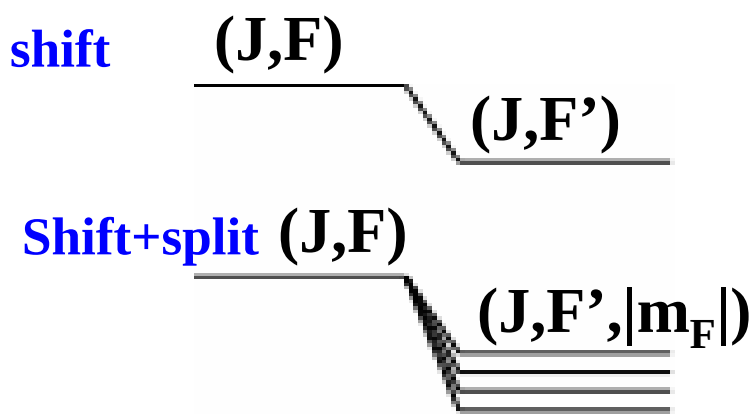

Experimental Setup

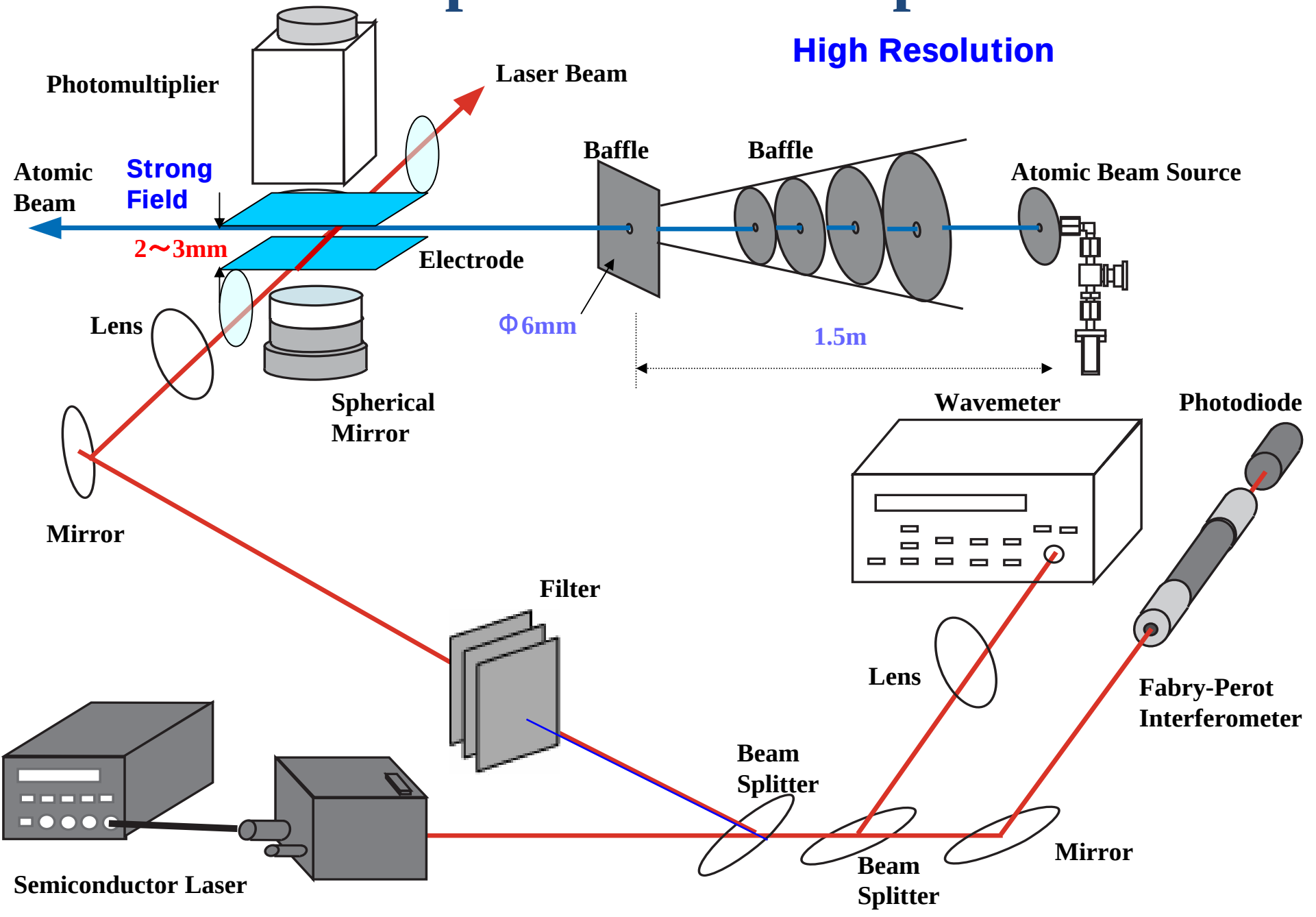

Separated Electrode System

- Two Electrodes: Separated

Less electric discharge
Stronger field

- Hard to measure distance

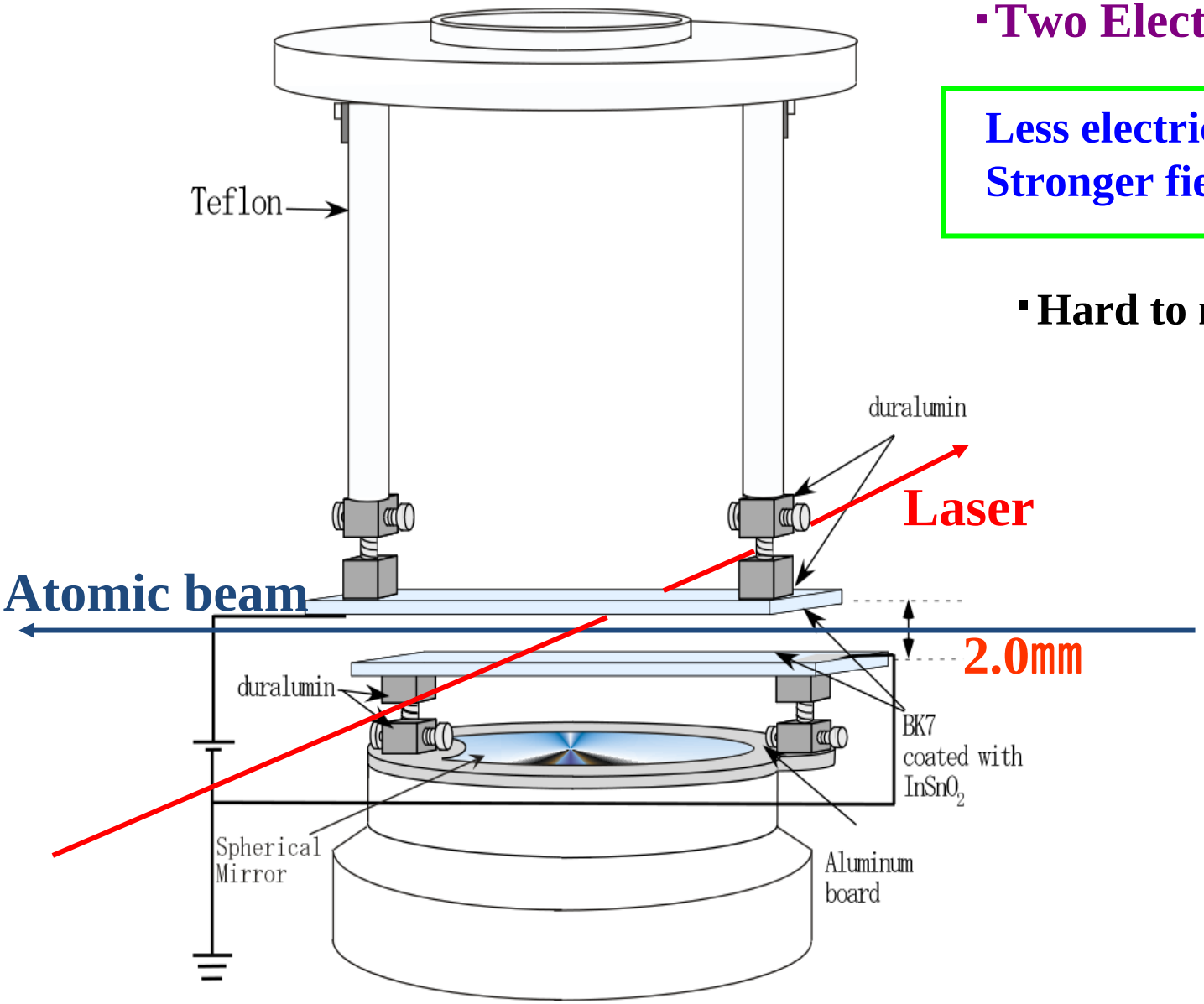

Compact Electrode System

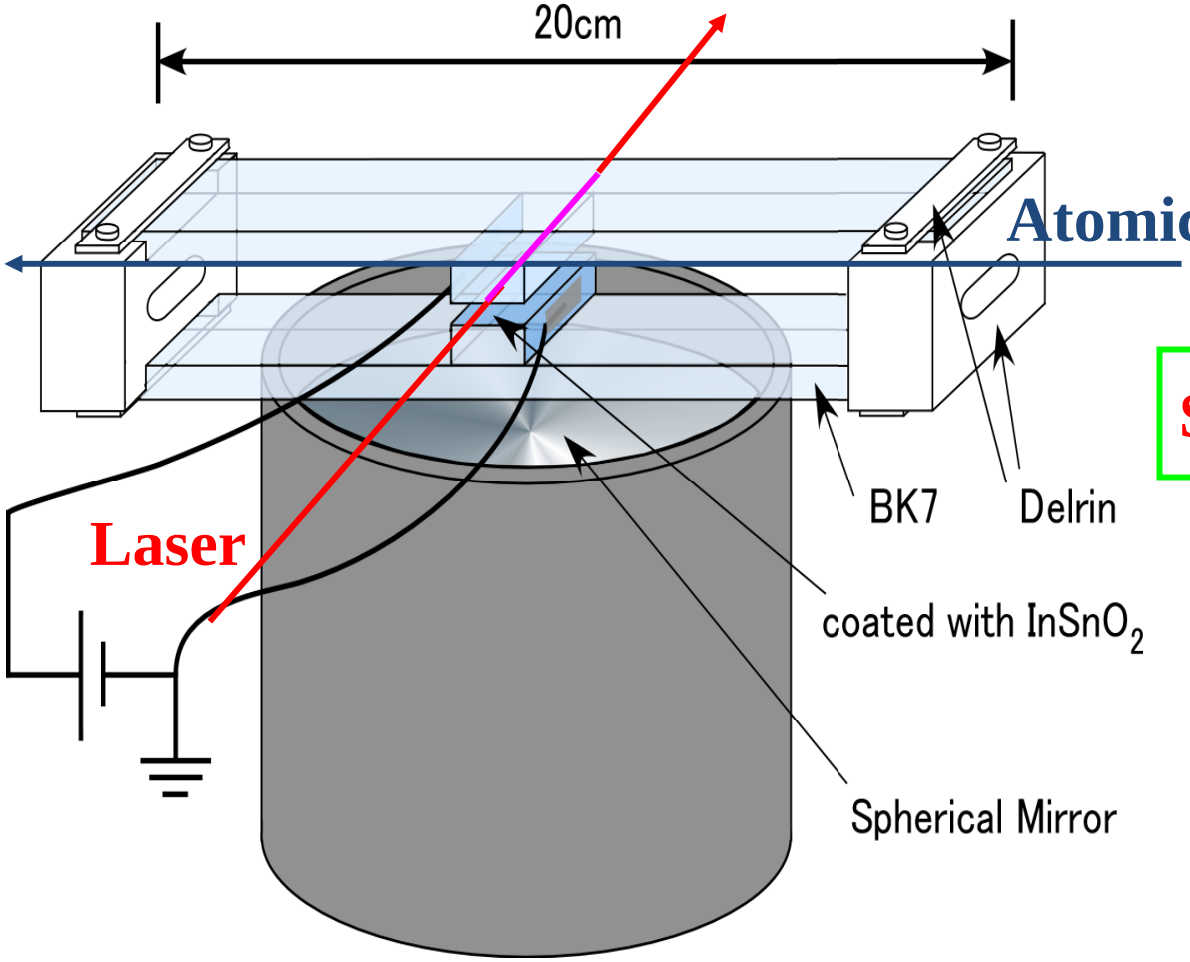

distance between electrodes: stable

Stable & uniform field

Independent of flange
Easy to set

Internal Focus System

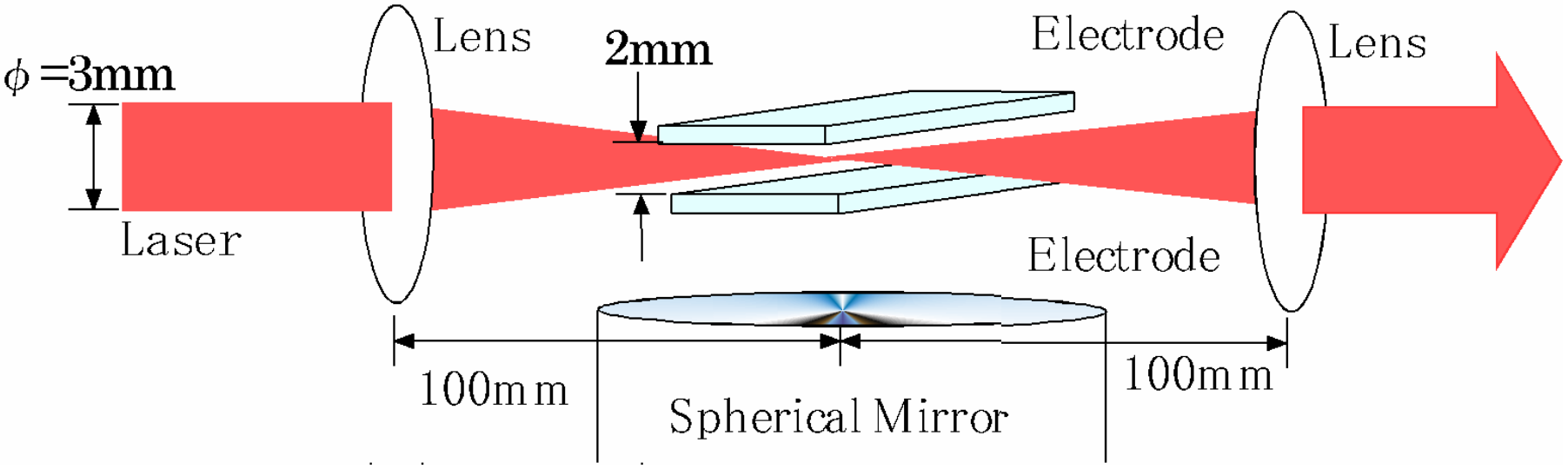

Interaction region～<1mm

Transitions Measured for Rb

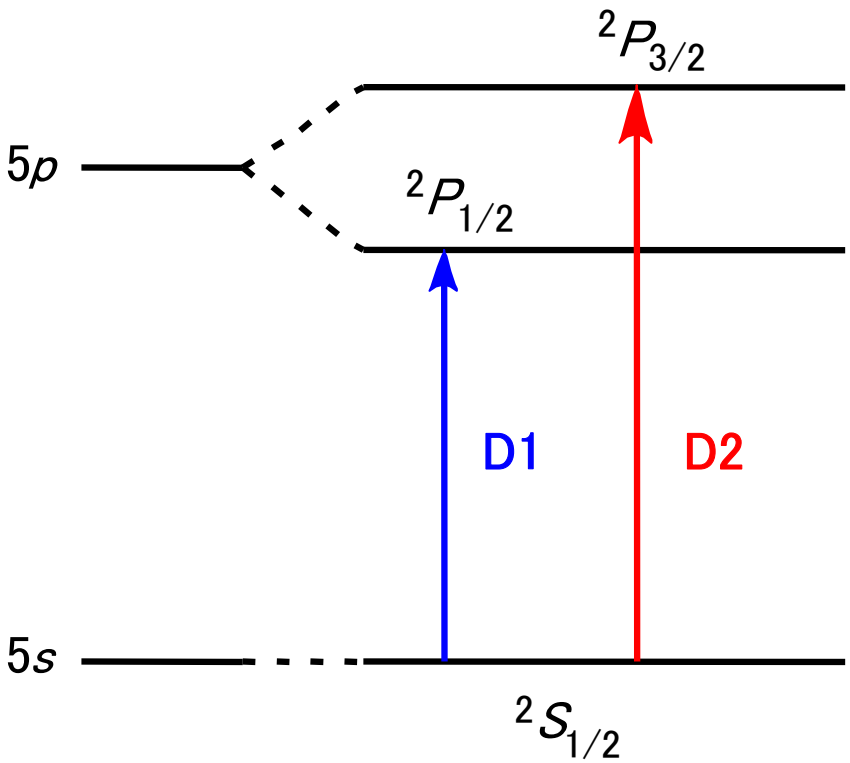

$5s\ ^2S_{1/2} \rightarrow 5p\ ^2P_{1/2}$ (794.8nm)

→ D1

$5s\ ^2S_{1/2} \rightarrow 5p\ ^2P_{3/2}$ (780.0nm)

→ D2

HFS Spectrum of Rb D1 Transition

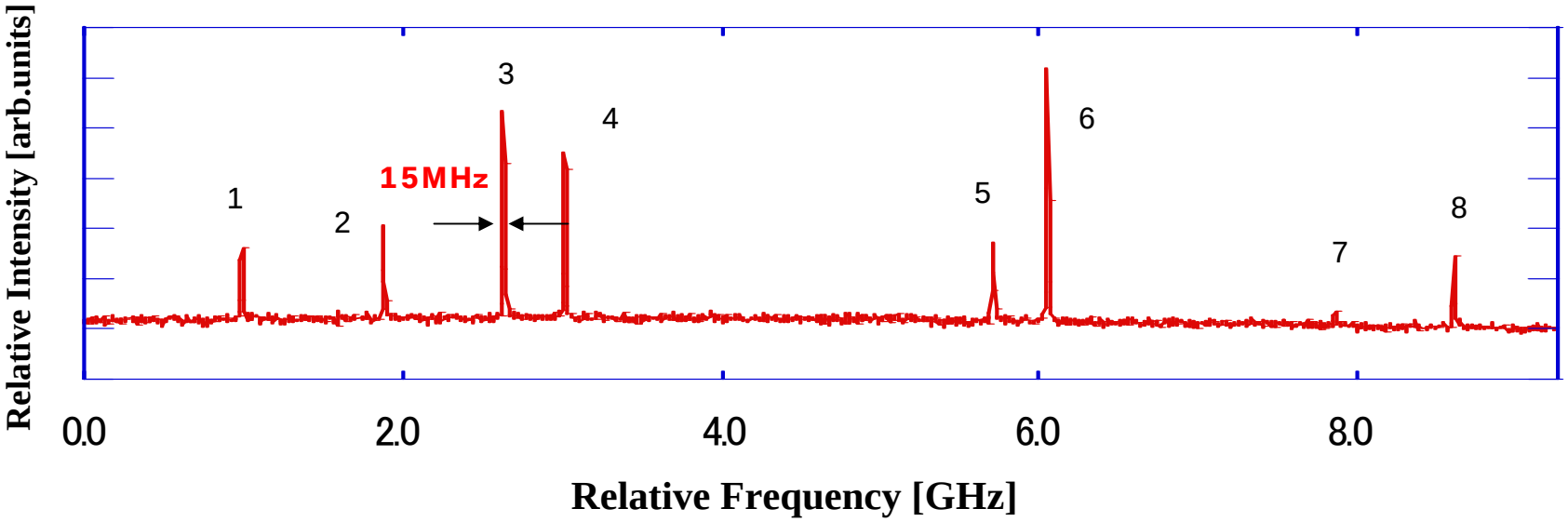

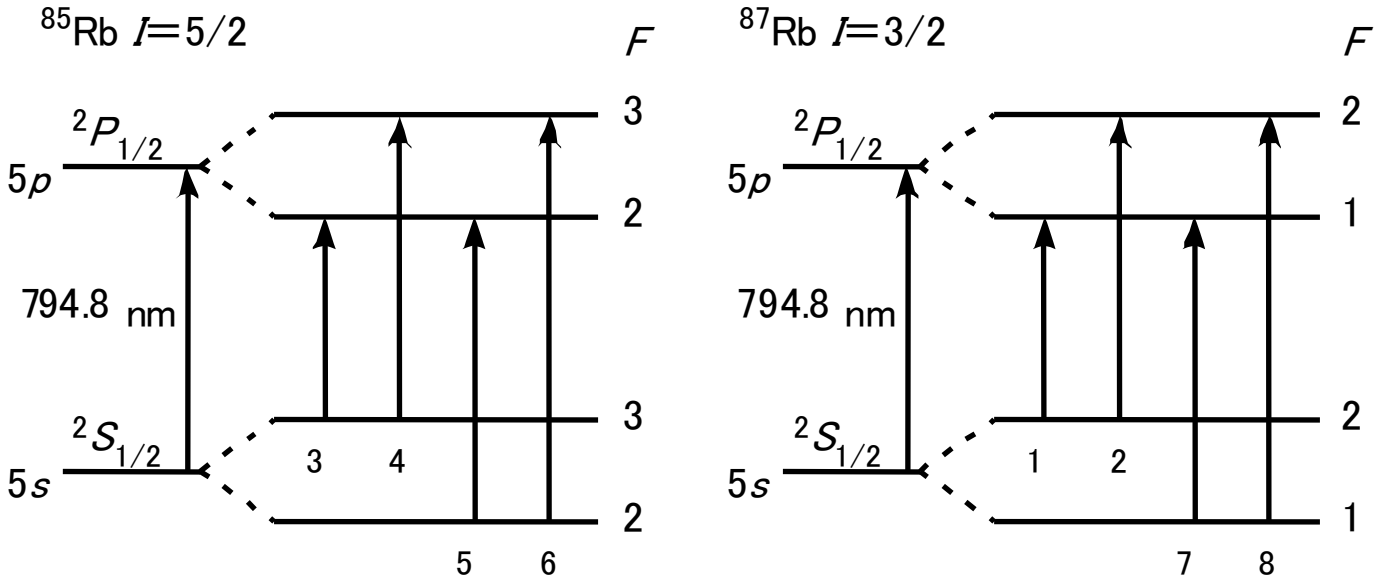

Stark Spectrum of Rb D1 transition

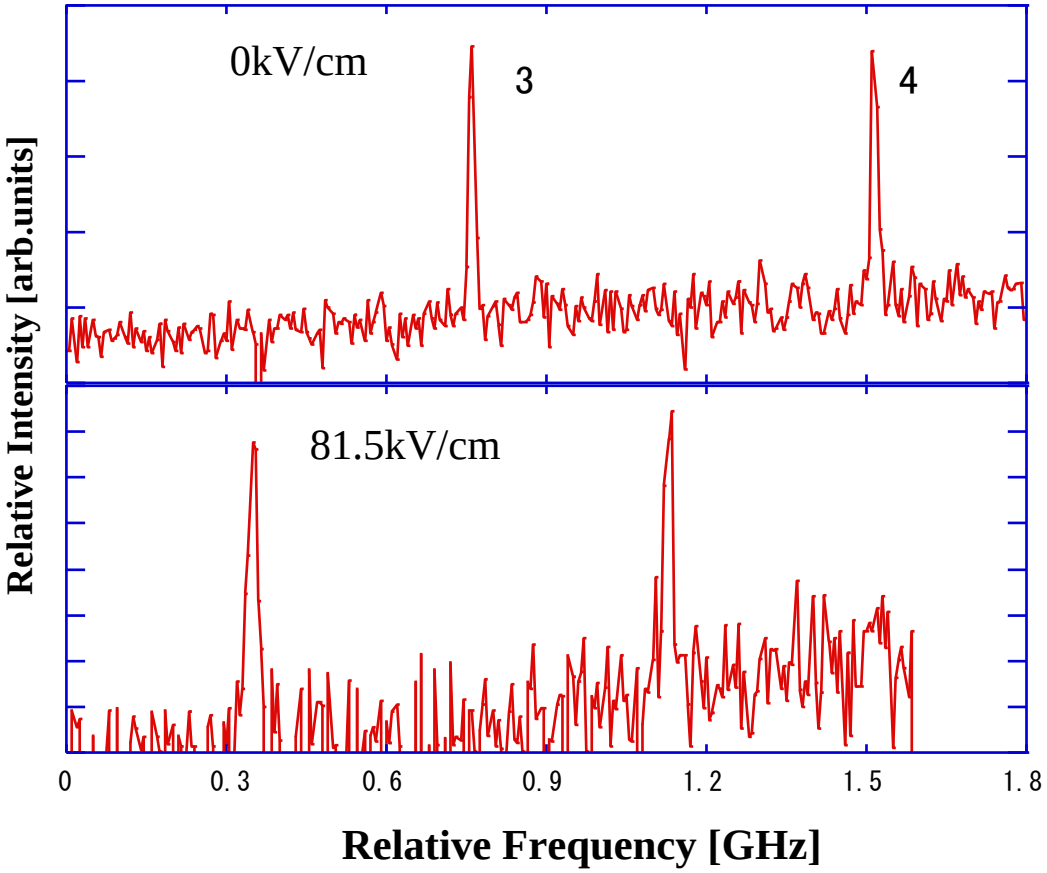

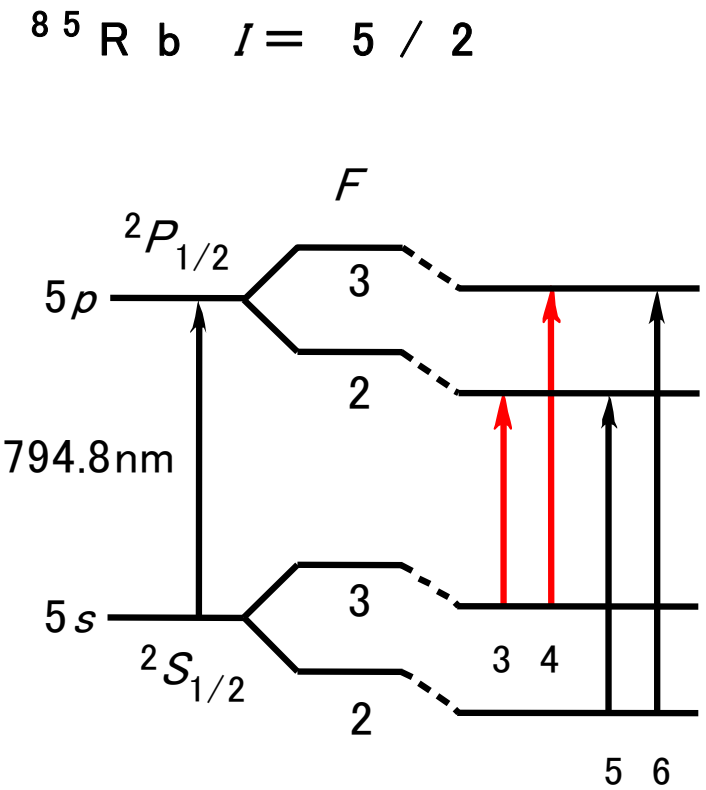

Dependence of Stark shift on electric field D1 transition

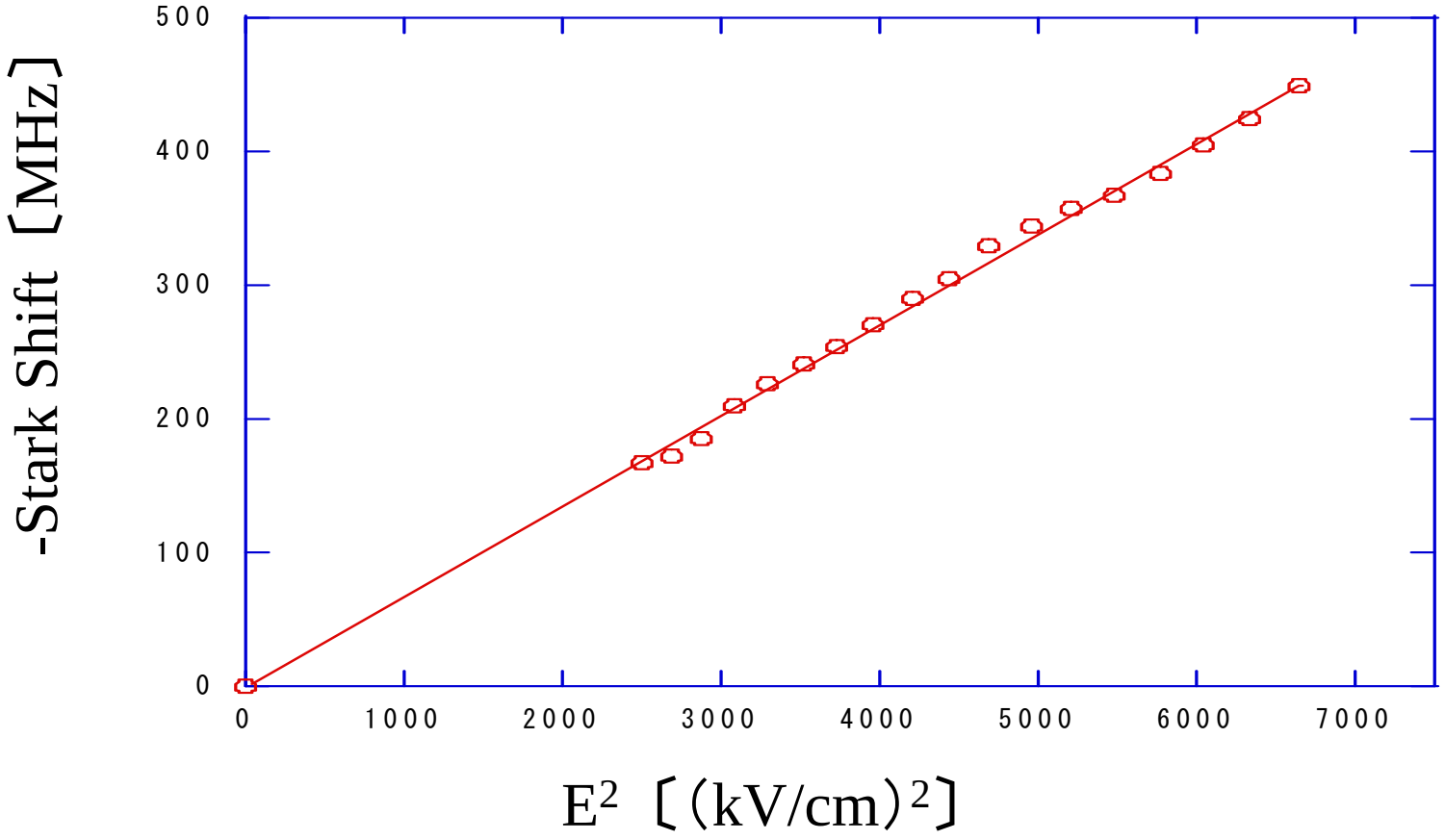

$$\Delta W = -\frac{1}{2}\left[\alpha_s\left({}^2P_{1/2}\right) - \alpha_s\left({}^2S_{1/2}\right)\right]E^2$$

HFS Spectrum of Rb D2 Transition

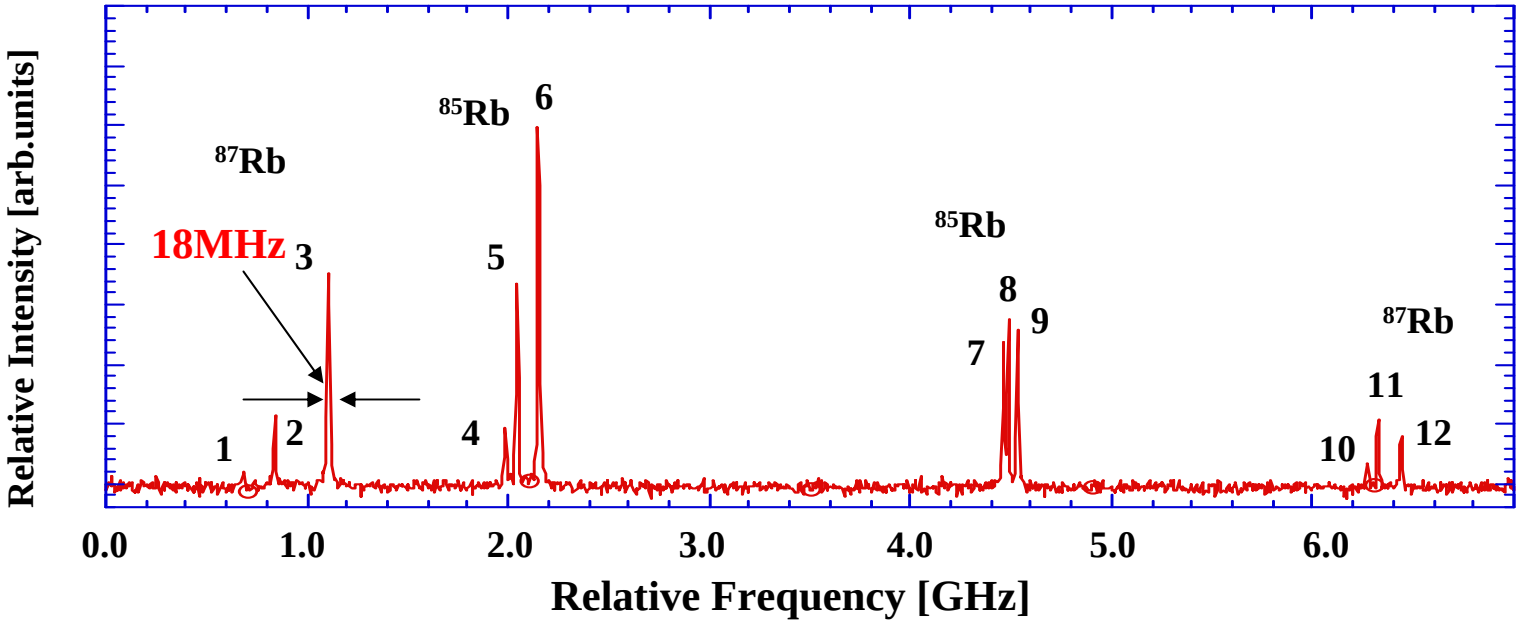

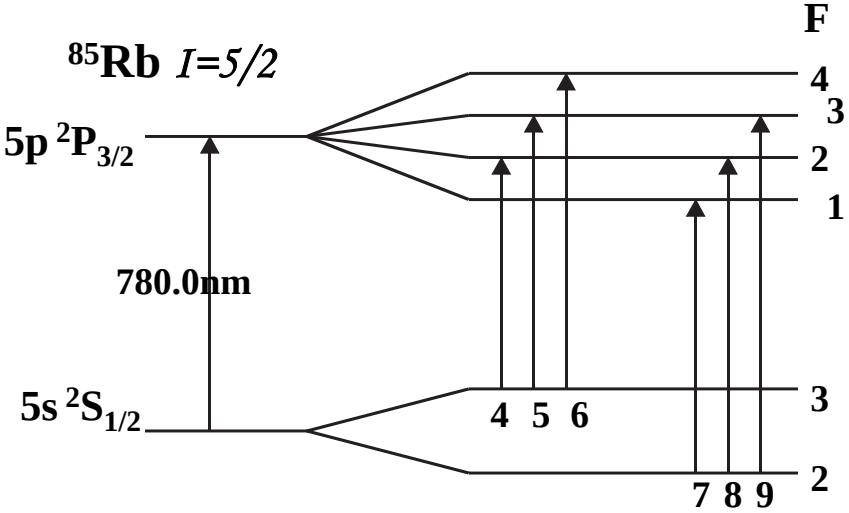

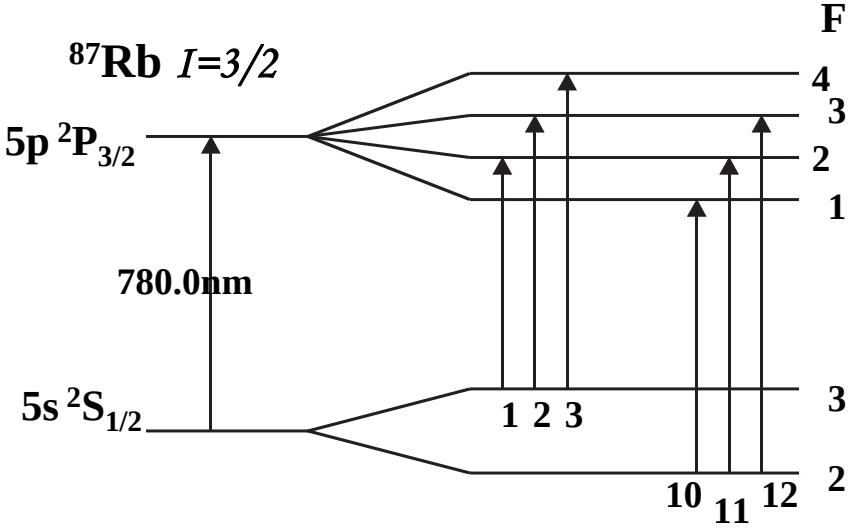

Stark Spectrum of Rb D2 Transition

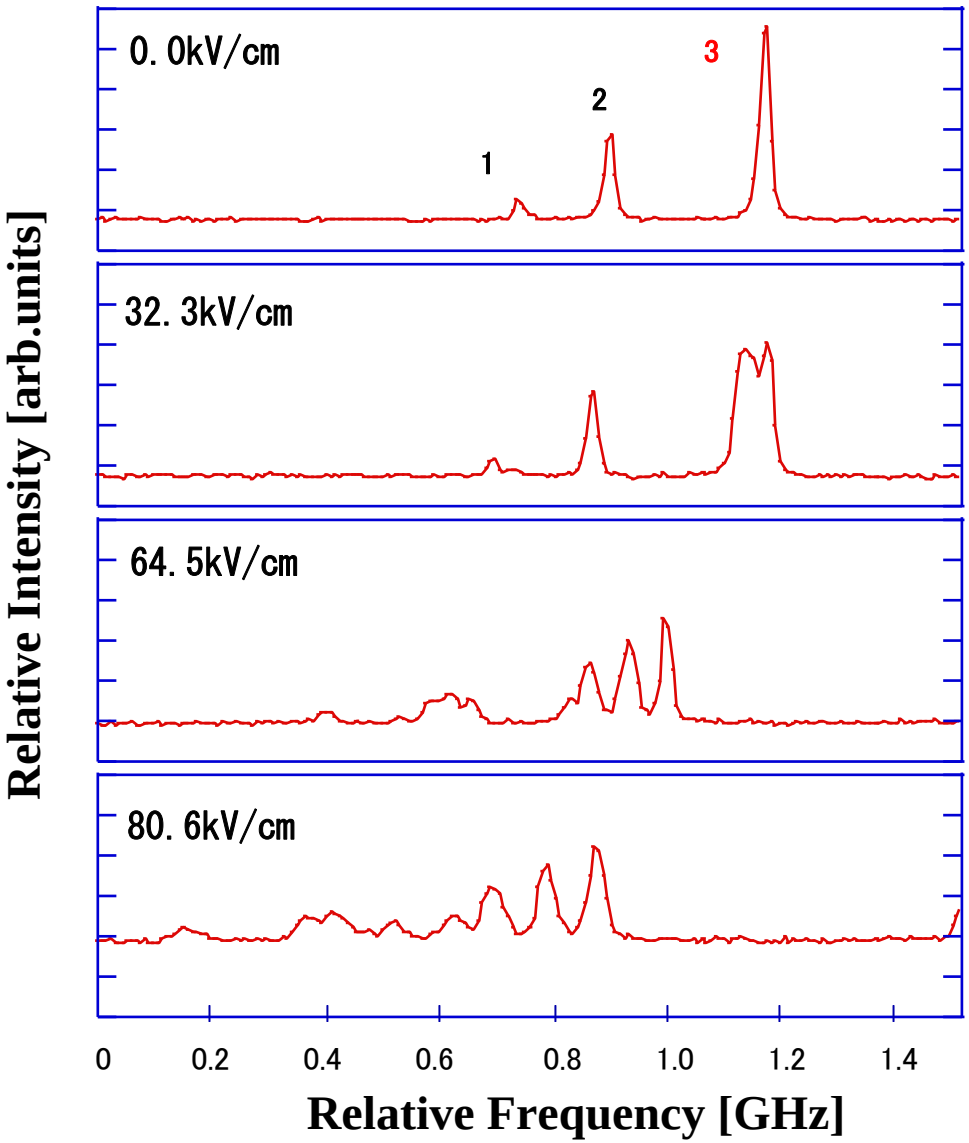

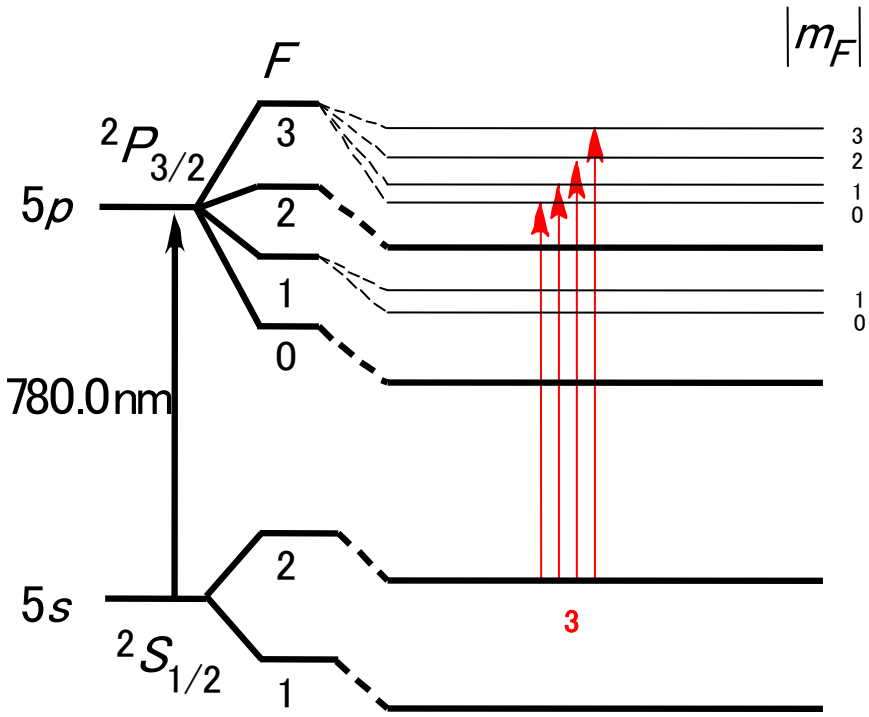

Dependence of Stark Shift on Electric Field
D2 Transition

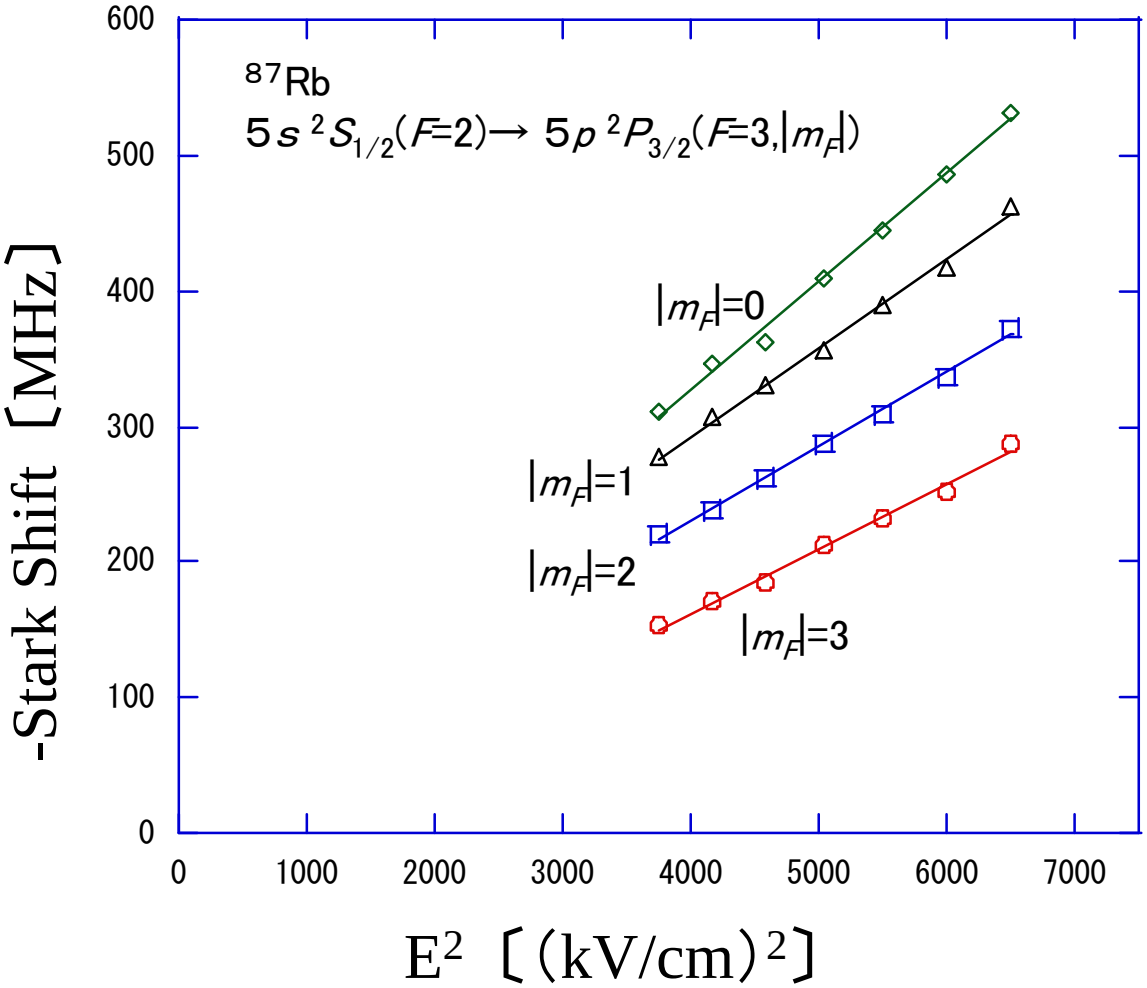

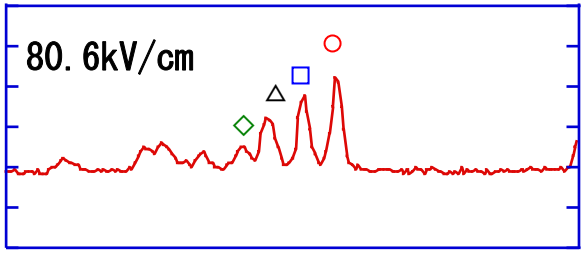

$$\Delta W = -\frac{1}{2}\left[\alpha_s\left(^2P_{3/2}\right) + \gamma\alpha_t\left(^2P_{3/2}\right) - \alpha_s\left(^2S_{1/2}\right)\right]E^2$$

Scalar & Tensor Polarizability
Rb D1, D2 Transition

	D 1	D 2	
	$\alpha_s(^2P_{1/2}) - \alpha_s(^2S_{1/2})$ $\left[\mathrm{kHz}\Big/\left(\frac{\mathrm{kV}}{\mathrm{cm}}\right)^2\right]$	$\alpha_0(^2P_{3/2}) - \alpha_0(^2S_{1/2})$ $\left[\mathrm{kHz}\Big/\left(\frac{\mathrm{kV}}{\mathrm{cm}}\right)^2\right]$	$\alpha_t(^2P_{3/2})$ $\left[\mathrm{kHz}\Big/\left(\frac{\mathrm{kV}}{\mathrm{cm}}\right)^2\right]$
This Work	**137.0±0.6**	**110.6±0.9**	**-54.0±3.1**
Reference	121±18 [a]	146±32 [a, b]	-40±6 [a]

a: Richard Marrus, Douglas Mccolm and Joseph Yellen : Phys. Rev. 147, 55 (1966).
b: Arthur Salop, Edword Pollack and Benjamin Bederson: Phys. Rev. 124, 1431 (1961).

Summary

1. **High-resolution UV Laser Spectroscopy**

   HFS

   Specific mass shift

   Electron density

   Electronic configuration

2. **Stark Effect**

   Electrode system

   Rb D1 and D2

   Stark shift and splitting

   Scalar and tensor polarizability